LONCIN 隆鑫

汽油机零部件图册

PART CATALOGUE

LC1P88F-1

LC1P90F-1

LC1P92F-1

版本号**VERSION No.**：**2011-01**

隆鑫通用动力股份有限公司 **LONCIN MOTOR CO.,LTD.**

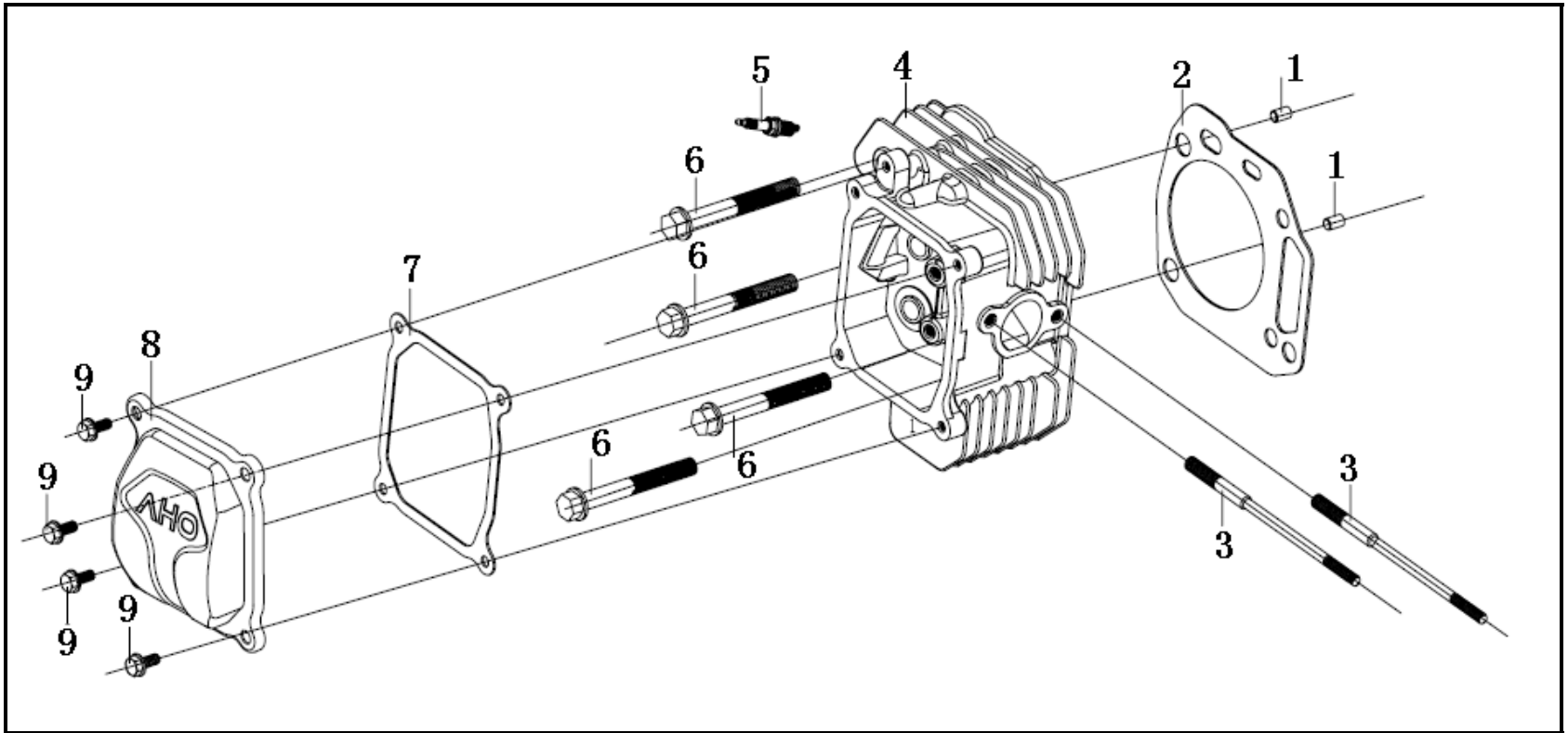

(Gear Box Assy)

No.	Part No.	Description	(Reqd. QTY)		
			1P88F-1	1P90F-1	1P92F-1
1	380600116-T110	Pin,Dowel	2	2	2
2	120150138-T361	Gasket,Cylinder	1	—	—
	120150139-T371	Gasket,Cylinder	—	1	—
	120150146-T380	Gasket,Cylinder	—	—	1
3	380180088-T370	Bolt,Stud	2	2	2
4	120080283-T370	Head Comp.,Cylinder	1	1	—
	120080436-T381	Head Comp.,Cylinder	—	—	1
5	270960028-0001	Spark Plug	1	1	1
6	380140335-0001	Bolt,Cylinder Head	4	4	4
7	120250028-T381	Packing,Head Cover	1	1	1
8	120220032-T381	Cover Comp.,Head,Left	1	1	1
9	380020070-T370	Bolt,Hexagonal 6×16.5-8×3.5	4	4	4

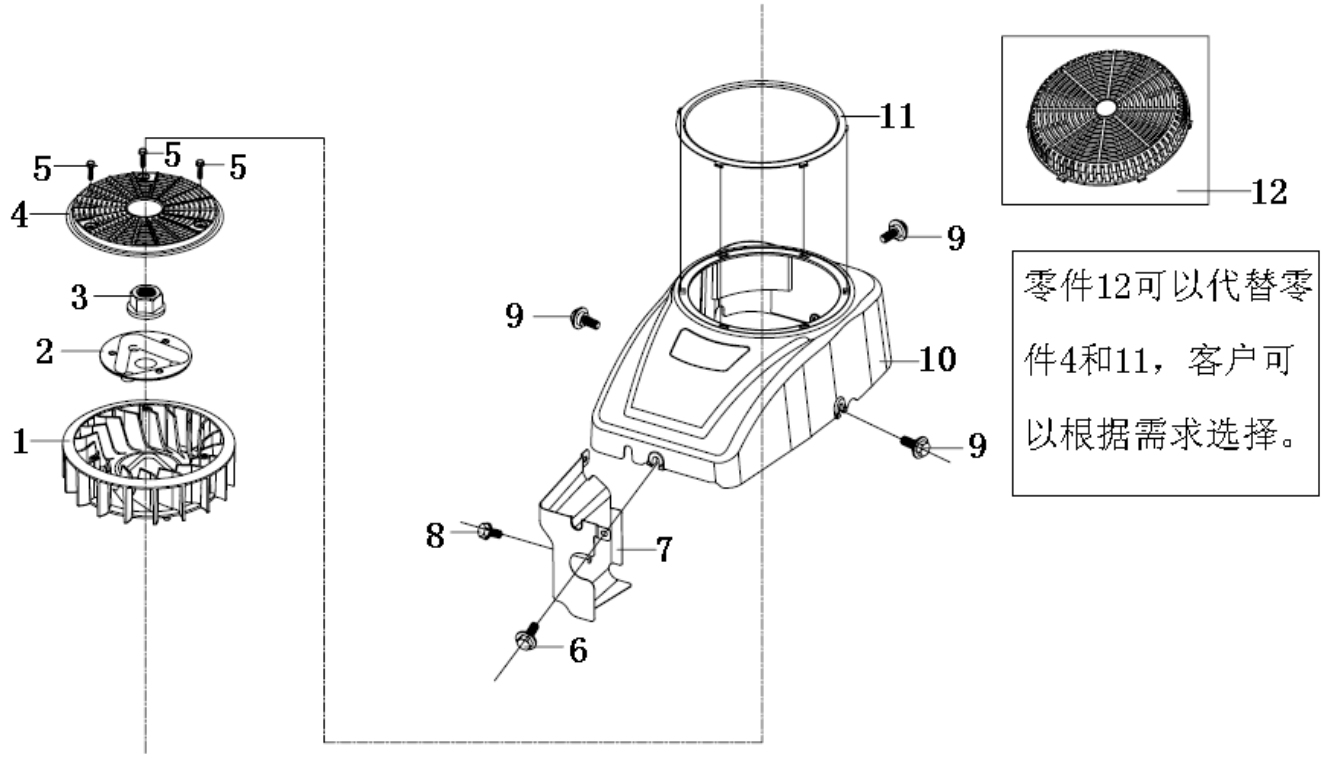

(Blower Housing)

No.	Part No.	Description	(Reqd. QTY) 1P88F-1	1P90F-1	1P92F-1
1	160180024-T381	Fan,Cooling	1	1	1
2	193590013-T370	Pulley,Starter	1	1	1
3	380370050-T110	Nut,Special	1	1	1
4	160850002-T381	Fan,Cover	1	1	1
5	380140049-0003	Bolt,Flange M5×16	3	3	3
6	380020087-T390	Bolt,Hexagonal	1	1	1
7	160190050-T381	Shroud Comp	1	1	1
8	380140067-0003	Bolt,Flange,M6×12	1	1	1
9	380020070-T370	Bolt,Hexagonal	3	3	3
10	160210046-T381	Cover Comp.,Fan	1	1	1
11	160840002-T381	Retaining Ring,Housing	1	1	1
12	195360009-T381	Case,Starter Outer	1	1	1

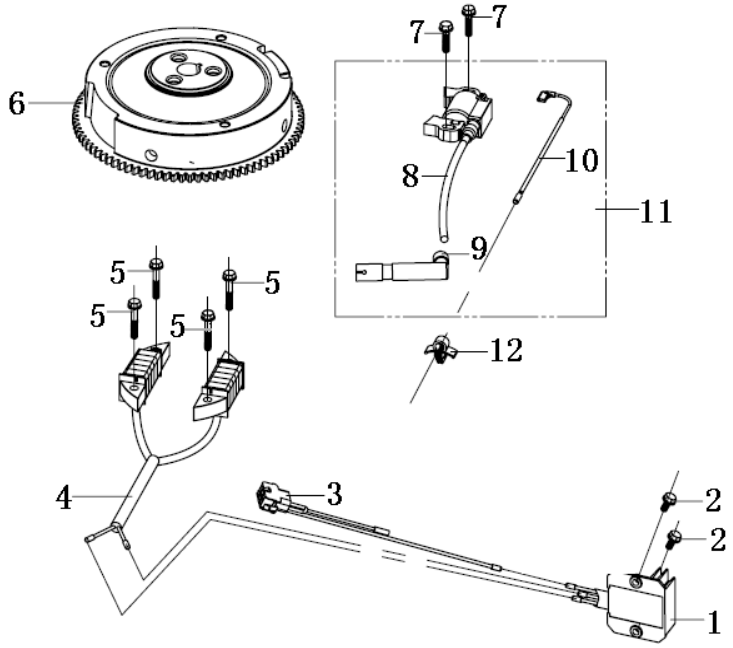

(Flywheel)

No.	Part No.	Description	(Reqd. QTY) 1P88F-1	1P90F-1	1P92F-1
1	270880145-T381	Rectifier	1	1	1
2	380140067-0003	Bolt,Flange M6×12	2	2	2
3	271280021-T381	Output Wire,Rectifier	1	1	1
4	270190012-T381	Coil Assy,Charge	1	1	1
5	380140100-0003	Bolt,Flange M6×35	4	4	4
6	270020093-T370	Flywheel Comp	1	1	1
7	380140103-0004	Bolt,Flange M6×25	2	2	2
8	270930037-T370	Coil,Ignition	1	1	1
9	270950068-T370	Rubber,Spark Plug Cap	1	1	1
10	271670010-T370	Wire,Stopping Engine	1	1	1
11	270920175-T370	Coil Assy,Ignition	1	1	1

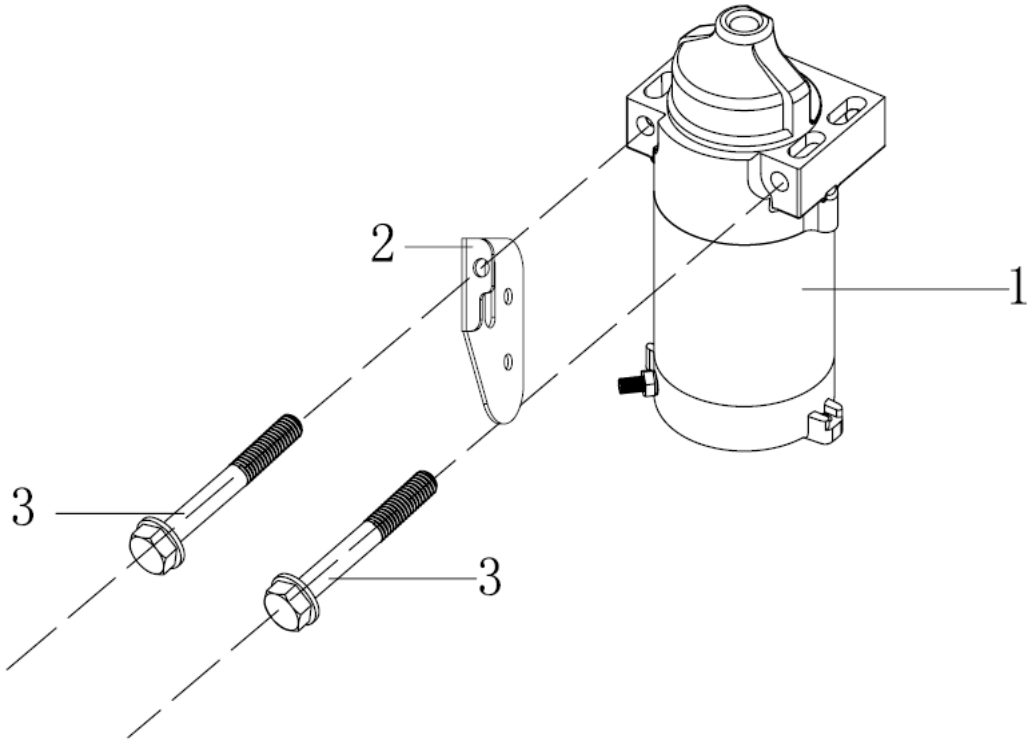

(Starting Motor Assy)

No.	Part No.	Description	(Reqd. QTY)		
			1P88F-1	1P90F-1	1P92F-1
1	270360058-T381	Starter Motor	1	1	1
2	270910008-T381	Bracket	1	1	1
3	380140453-0001	Bolt,Flange M8×80	2	2	2

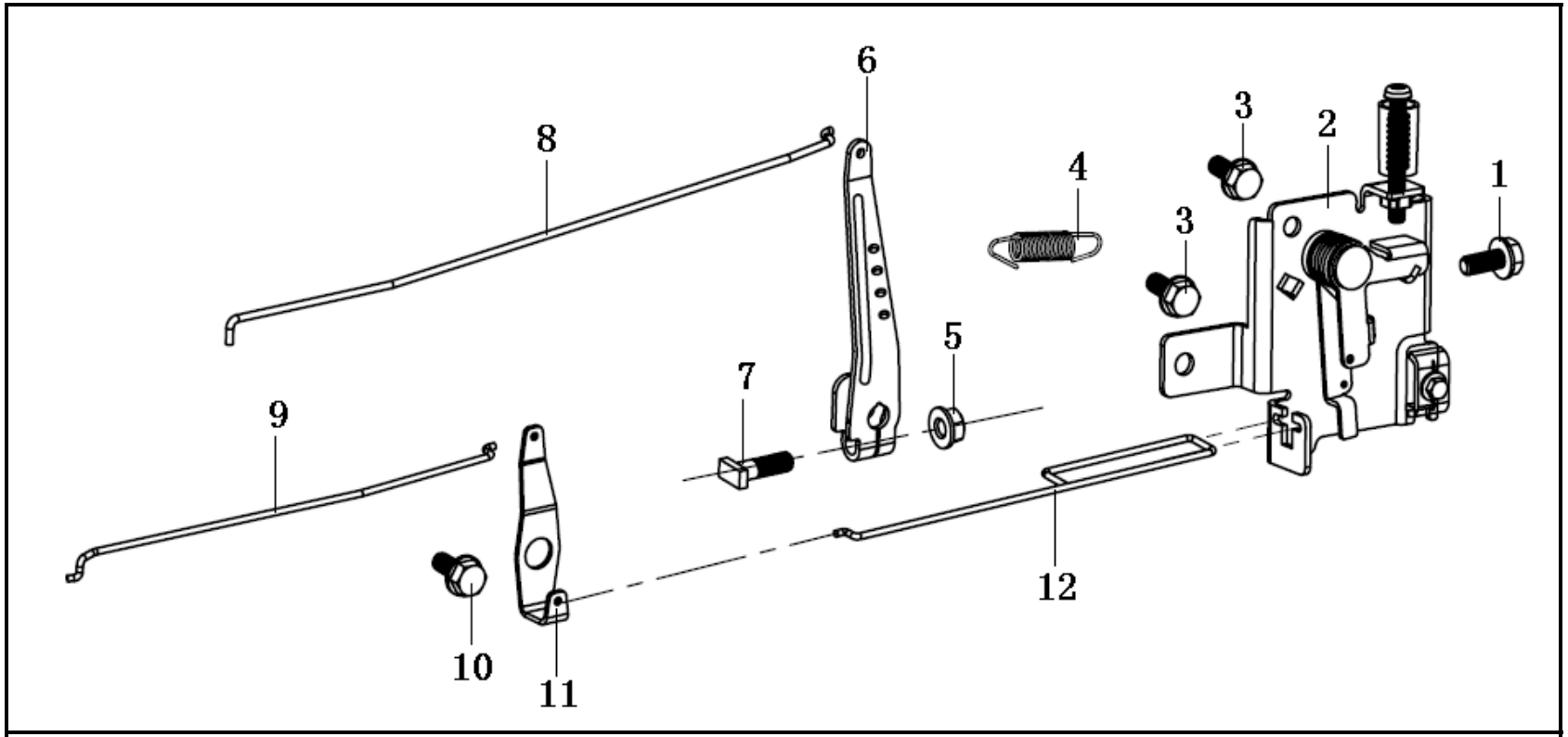

(Governor)

No.	Part No.	Description	(Reqd. QTY) 1P88F-1	1P90F-1	1P92F-1
1	380140013-0005	Bolt M6×16	1	1	1
2	171680036-T370	Contorl assy	1	1	1
3	380140209-0001	Bolt,Flange M6×14	2	2	2
4	171600020-T370	Spring,Governor	1	1	1
5	380370066-0001	Nut,Flange M6	1	1	1
6	171620013-T370	Arm,Governor	1	1	1
7	380250002-T040	Bolt,Governor Arm	1	1	1
8	171590013-T370	Rod,Governor	1	1	1
9	171490002-T370	Rod,Choke	1	1	1
10	380020071-T370	Bolt,Hexagonal	1	1	1
11	171480013-T370	Stay Comp.,Choke	1	1	1
12	171650003-T370	Rod,Throttle	1	1	1

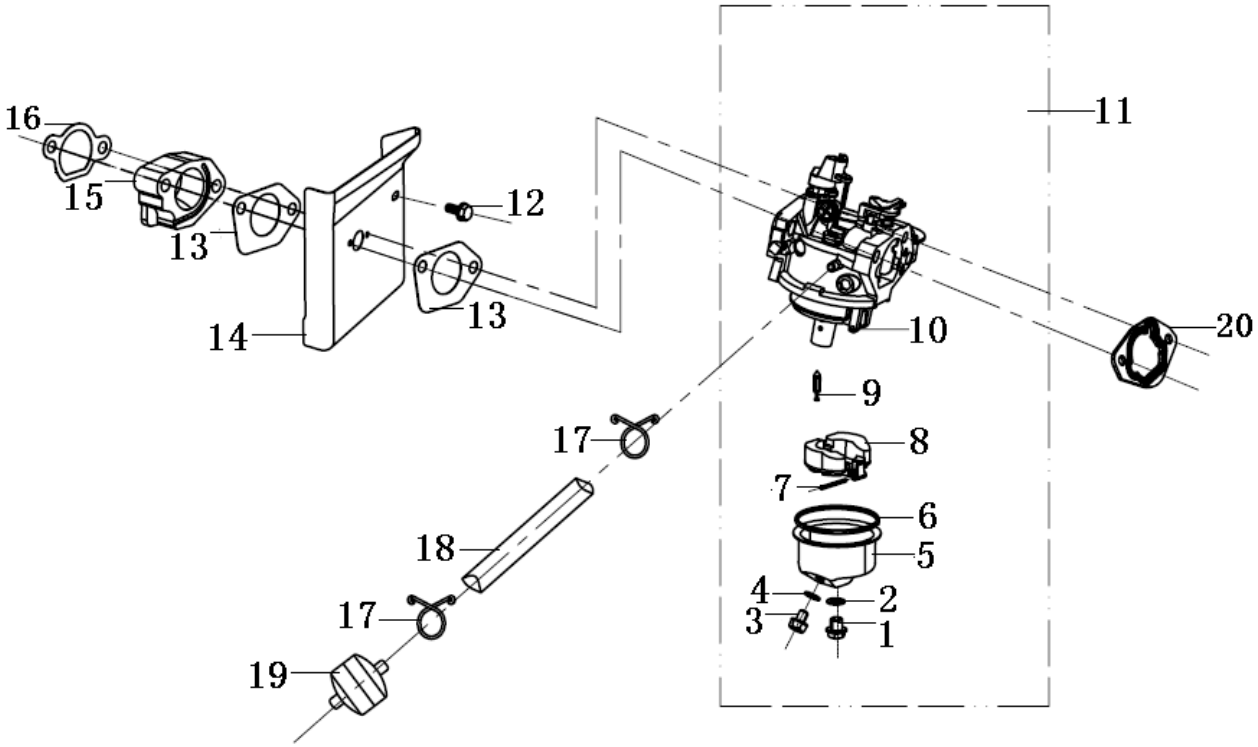

(Carburetor)

No.	Part No.	Description	(Reqd. QTY)		
			1P88F-1	1P90F-1	1P92F-1
1	380140445-T110	Bolt,Oil Cup	1	1	1
2	380450595-T370	Washer,oil cup bolt	1	1	1
3	172930001-T040	Drain Plug,Oil Cup	1	1	1
4	380450594-T370	Gasket,Oil Cup	1	1	1
5	170250022-T110	Oil cup	1	1	1
6	380840456-T110	Gasket,Oil Cup	1	1	1
7	170290016-T110	Pin,Float	1	1	1
8	170280020-T110	Float	1	1	1
9	170180025-T110	Valve,Float	1	1	1
10	170160054-T370	Noumenon,Carburetor	1	1	1
11	170020652-T370	Nozzle,Main	1	1	—
	170020729-T380	Nozzle,Main	—	—	1
12	380140067-0003	Bolt, Flange	1	1	1
13	170430099-T370	Packing,Carburetor	2	2	2
14	160190049-T381	Shroud Comp	1	1	1

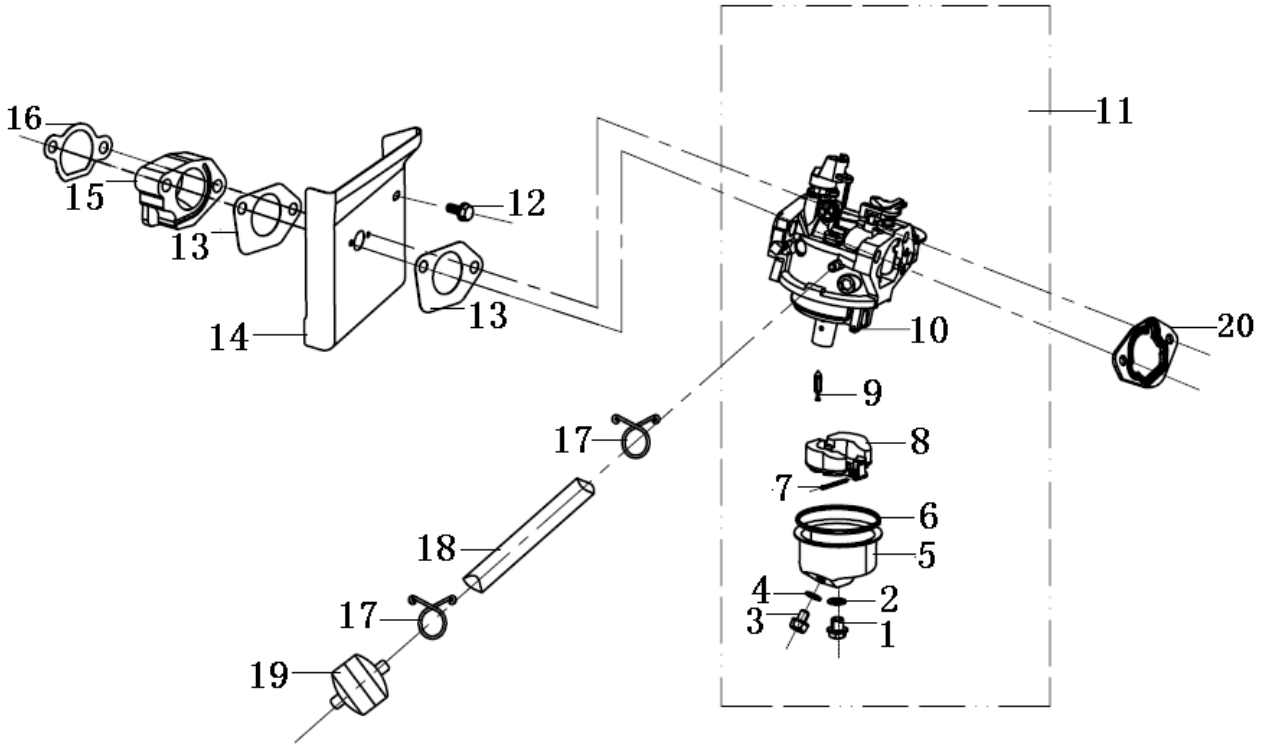

(Carburetor)

No.	Part No.	Description	(Reqd. QTY) 1P88F-1	1P90F-1	1P92F-1
15	170440053-T370	Insulatir,Carburetor	1	1	1
16	170430101-T370	Packing,Carburetor	1	1	1
17	380950193-T370	Tube	2	2	2
18	380750335-T370	Oil Pipeline11*6.5*50	1	1	1
19	170010018-T370	Strainer,Fuel	1	1	1
20	170430100-T370	Packing,Carburetor	1	1	1

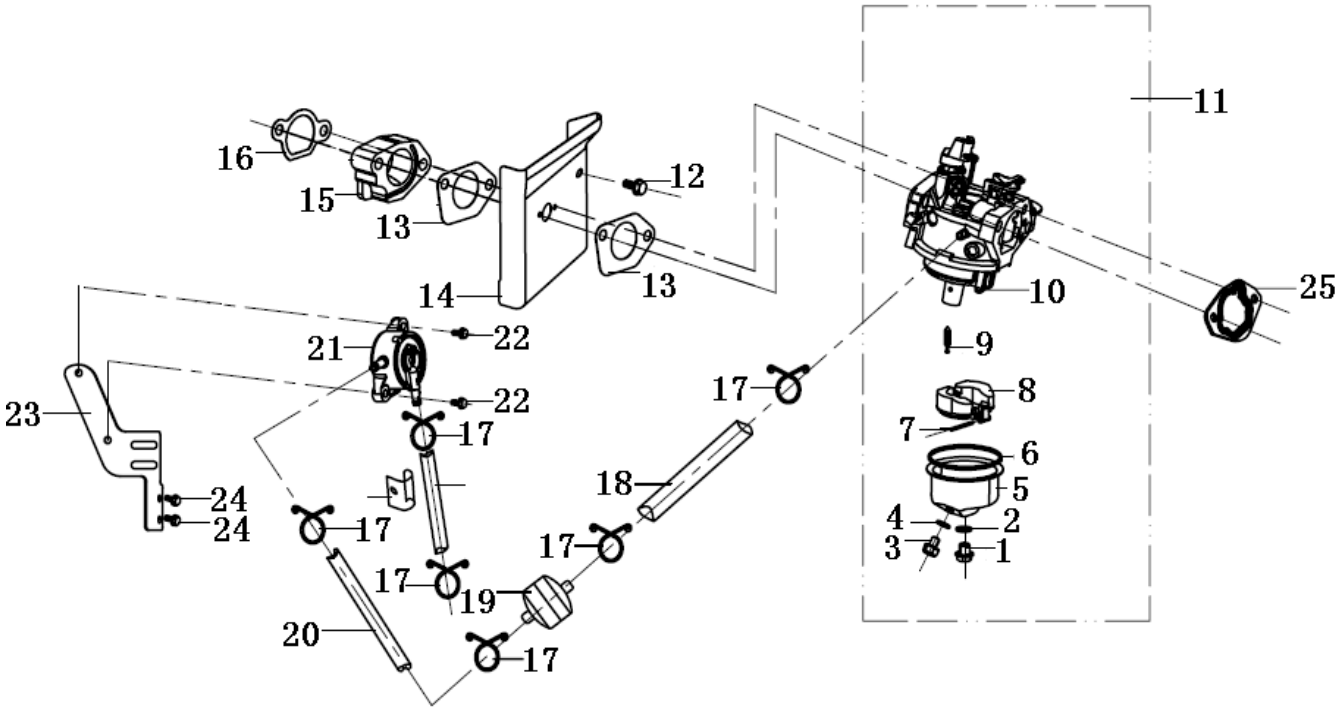

(Carburetor With Pump)

No.	Part No.	Description	(Reqd. QTY)		
			1P88F-1	1P90F-1	1P92F-1
1	380140445-T110	Bolt,Oil Cup	1	1	1
2	380450595-T370	Washer,oil cup bolt	1	1	1
3	172930001-T040	Drain Plug,Oil Cup	1	1	1
4	380450594-T370	Gasket,Oil Cup	1	1	1
5	170250022-T110	Oil cup	1	1	1
6	380840456-T110	Gasket,Oil Cup	1	1	1
7	170290016-T110	Pin,Float	1	1	1
8	170280020-T110	Float	1	1	1
9	170180025-T110	Valve,Float	1	1	1
10	170160054-T370	Noumenon,Carburetor	1	1	1
11	170020652-T370	CARBURETOR	1	1	—
	170020729-T380	CARBURETOR	—	—	1
12	380140067-0003	Bolt, Flange	1	1	1
13	170430099-T370	Packing,Carburetor	2	2	2
14	160190049-T381	Shroud Comp	1	1	1

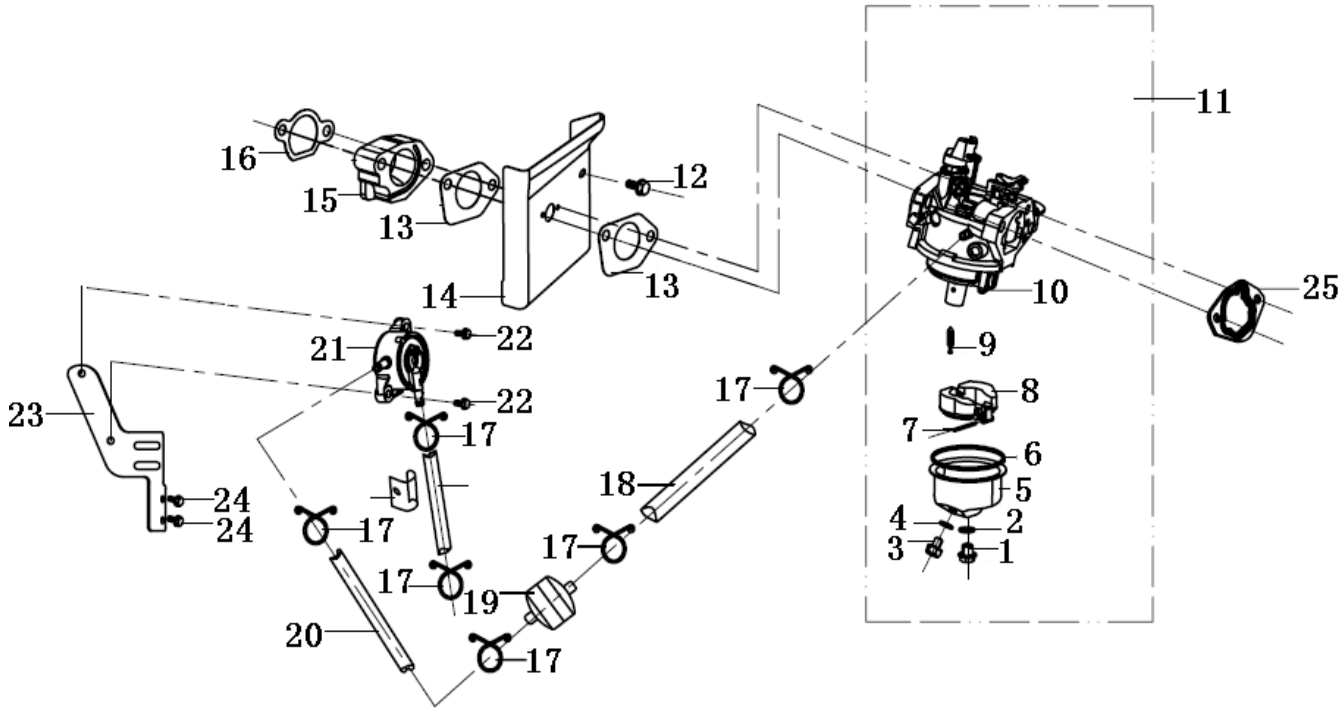

(Carburetor With Pump)

No.	Part No.	Description	(Reqd. QTY)		
			1P88F-1	1P90F-1	1P92F-1
15	170440053-T370	Insulatir,Carburetor	1	1	1
16	170430101-T370	Packing,Carburetor	1	1	1
17	380950193-T370	Tube	6	6	6
18	380750200-T370	Oil Pipeline11*6.5*105	1	1	1
19	170010018-T370	Strainer,Fuel	1	1	1
20	380750336-T370	Oil Pipeline11*6.5*285	1	1	1
21	170460002-T370	Fuel Pump	1	1	1
22	380140209-0005	Bolt, Flange	2	2	2
23	170470005-T370	Stent Fuel Pump	1	1	1
24	380140077-0005	Bolt, Flange	2	2	2
25	170430100-T370	Packing,Carburetor	1	1	1

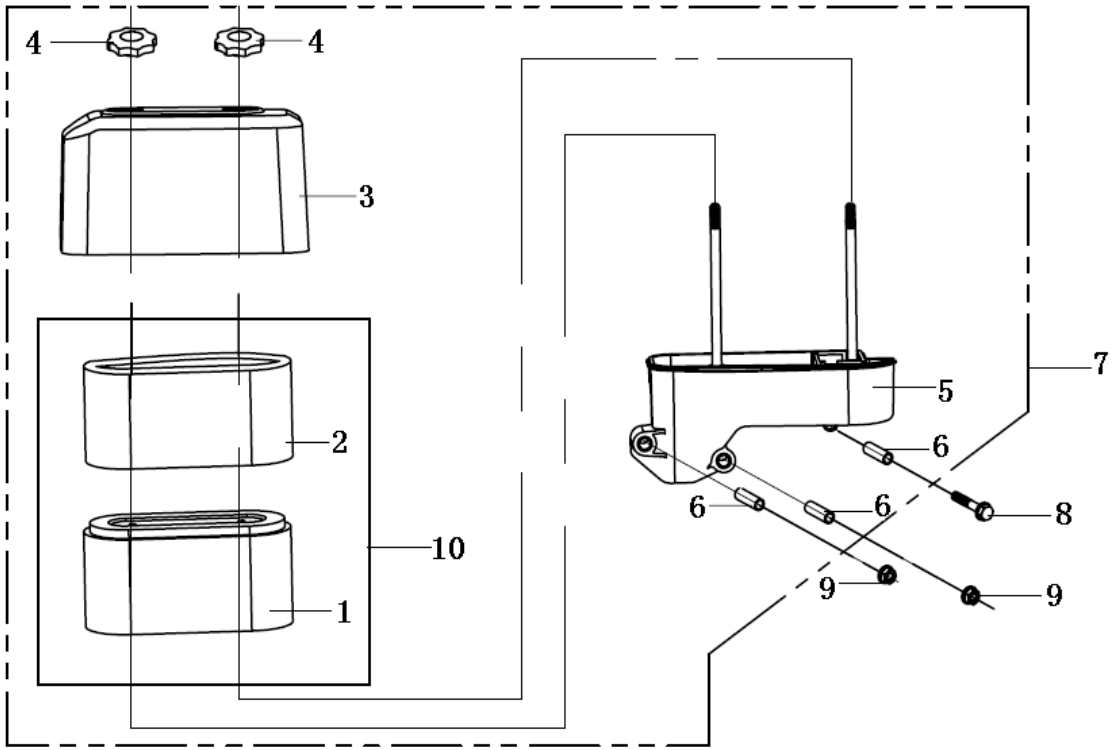

(Air Cleaner)

No.	Part No.	Description	(Reqd. QTY)		
			1P88F-1	1P90F-1	1P92F-1
1	180130188-T381	Element	1	1	1
2	180130187-T381	Filter,outer	1	1	1
3	180070146-T381	Cover,Air Cleaner	1	1	1
4	181950006-T381	Handle,Air Cleaner Bolt	2	2	2
5	180280028-T381	Elbow comp.,air cleaner	1	1	1
6	380821930-T370	Collar,Long	3	3	3
7	180020492-T381	Air Cleaner Assy	1	1	1
8	380140100-0003	Bolt,Flange M6×35	1	1	1
9	380370066-0001	Nut M6	2	2	2
10	180100064-T381	Element,Left	1	1	1

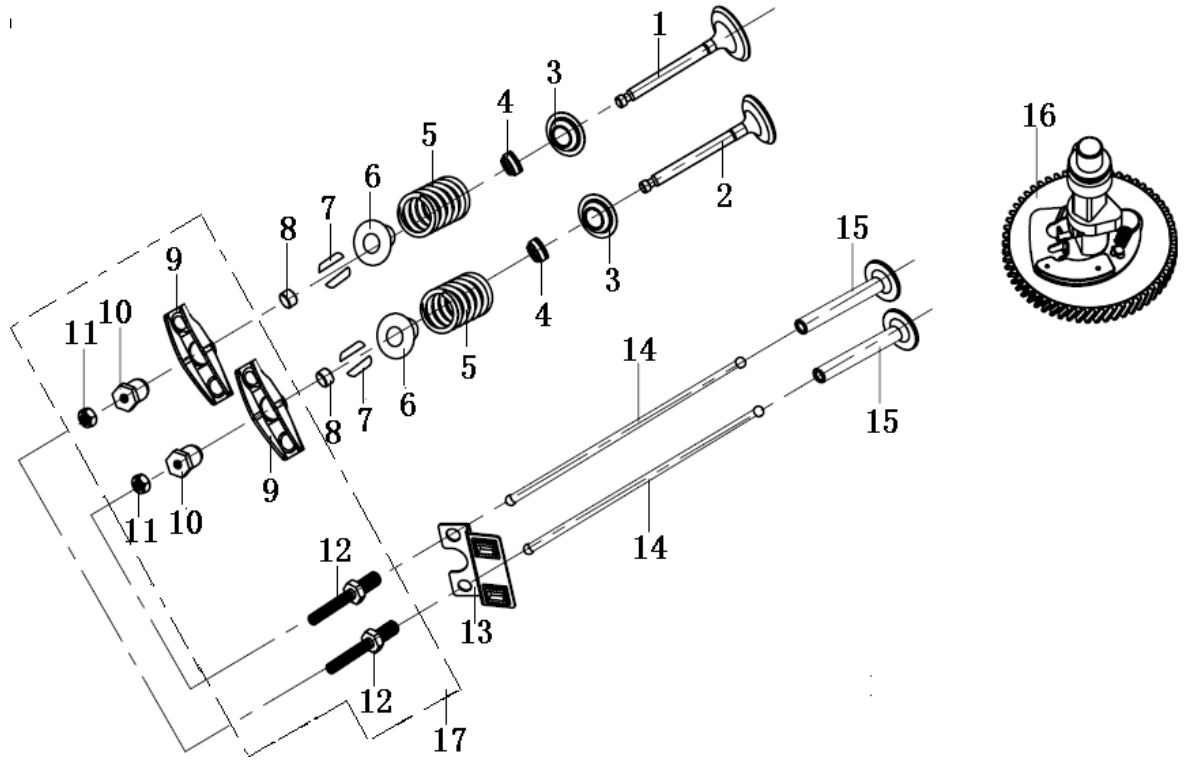

(Valve)

No.	Part No.	Description	(Reqd. QTY) 1P88F-1	1P90F-1	1P92F-1
1	140300055-T370	Valve, In.	1	1	—
	140300065-T381	Valve, In.	—	—	1
2	140310055-T370	Valve, Ex.	1	1	—
	140310064-T381	Valve, Ex.	—	—	1
3	140360010-T110	Seat, Valve Spring	2	2	2
4	140400012-T110	Seal, Valve Stem	2	2	2
5	140340025-T11D	Spring, Valve	2	2	2
6	140380021-T11D	Retainer, Ex. Valve Spring	2	2	2
7	140390015-T11D	Valve Keeper	4	4	4
8	140320002-T110	Rotator, Valve	2	2	—
9	140460024-T110	Rocker Arm	2	2	—
	140460039-T381	Rocker Arm	—	—	2
10	140490012-T040	Pivot Rocker Arm	2	2	2
11	140470001-T040	Nut, Pivot Adjusting	2	2	2
12	140480012-T040	Bolt Povit	2	2	2

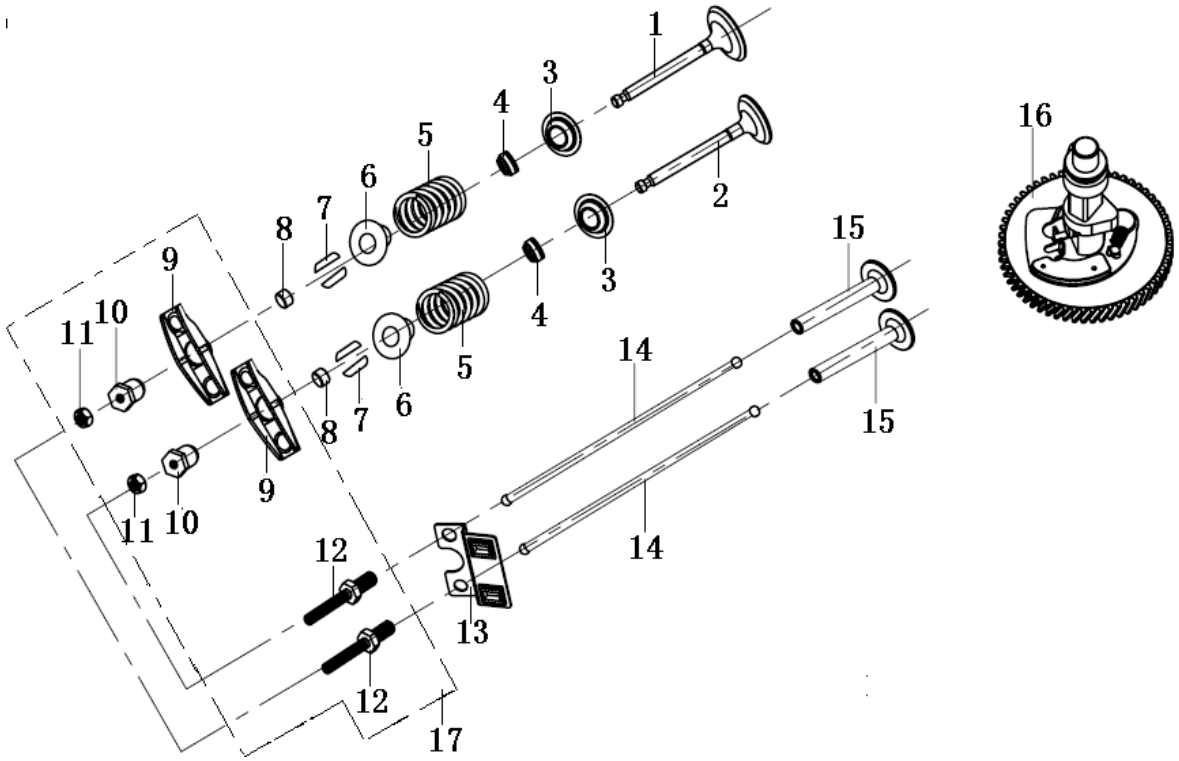

(Valve)

No.	Part No.	Description	(Reqd. QTY) 1P88F-1	1P90F-1	1P92F-1
13	140710007-T370	Plate,Assy	1	1	—
	140710011-T381	Plate,Assy	—	—	1
14	140670011-T370	Rod Push	2	2	2
15	140690004-T110	Lifter,Valve	2	2	2
16	140020055-T370	Camshaft	1	1	1
17	140450023-T110	Valve Rocker Assy	2	2	—
	140450041-T381	Valve Rocker Assy	—	—	2

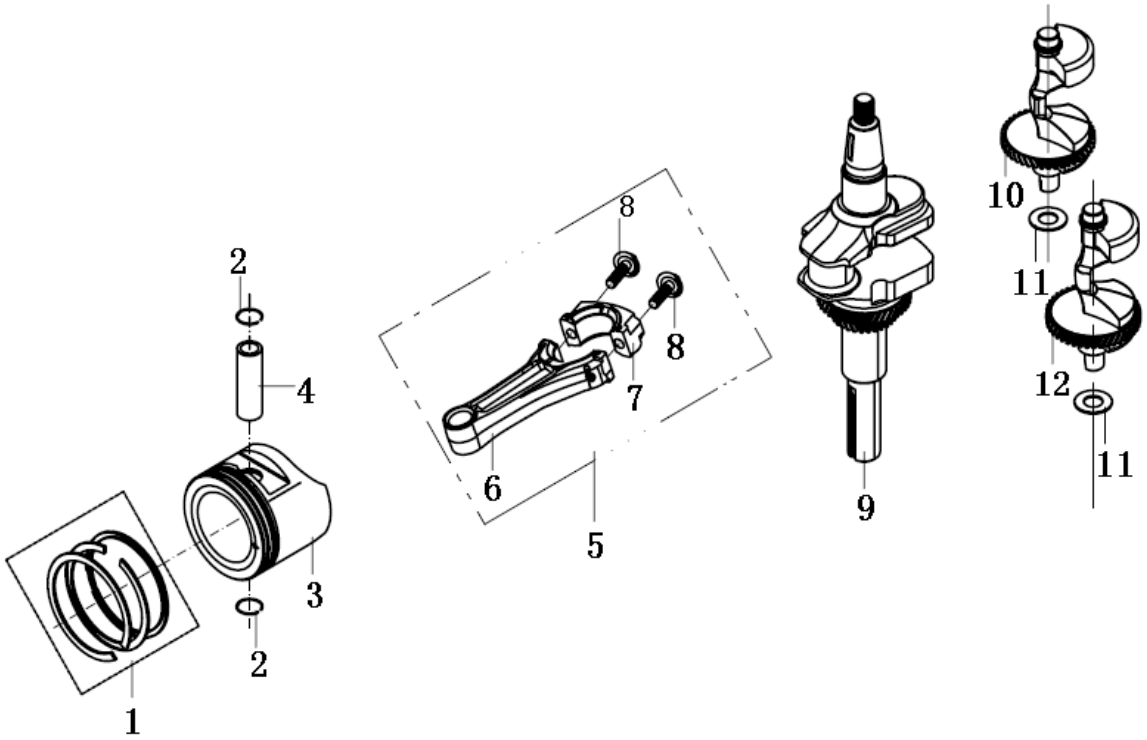

(Crankshaft)

No.	Part No.	Description	(Reqd. QTY) 1P88F-1	1P90F-1	1P92F-1
1	130070083-T110	Ring Set	1	—	—
	130070088-T370	Ring Set	—	1	—
	130070103-T380	Ring Set	—	—	1
2	380560057-T110	Clip,Piston Pin	2	2	2
3	130030122-T360	Piston	1	—	—
	130030094-T370	Piston	—	1	—
	130030114-T380	Piston	—	—	1
4	130060034-T110	Pin,Piston	1	1	1
5	130150048-T370	Rod Assy.,Connecting	1	1	1
6	130160012-T370	Connecting Rod	1	1	1
7	130170010-T370	Connecting Rod Cover	1	1	1
8	130180009-T370	Bolt,Connecting Rod	2	2	2
9	130290102-T370	Crankshaft Comp	1	1	1
10	130450010-T370	Weight,Balancer	1	1	1
11	380450560-T370	Washer	2	2	2

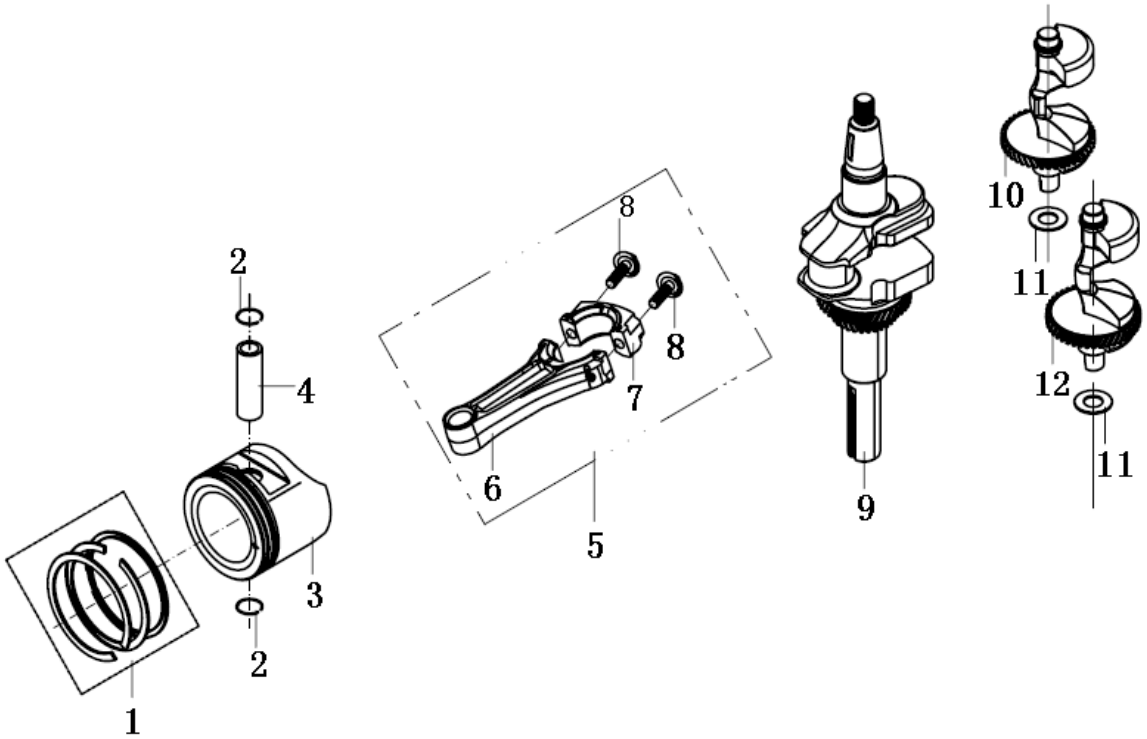

(Crankshaft)

No.	Part No.	Description	(Reqd. QTY) 1P88F-1	1P90F-1	1P92F-1
12	130450011-T370	Weight,Balancer	1	1	1

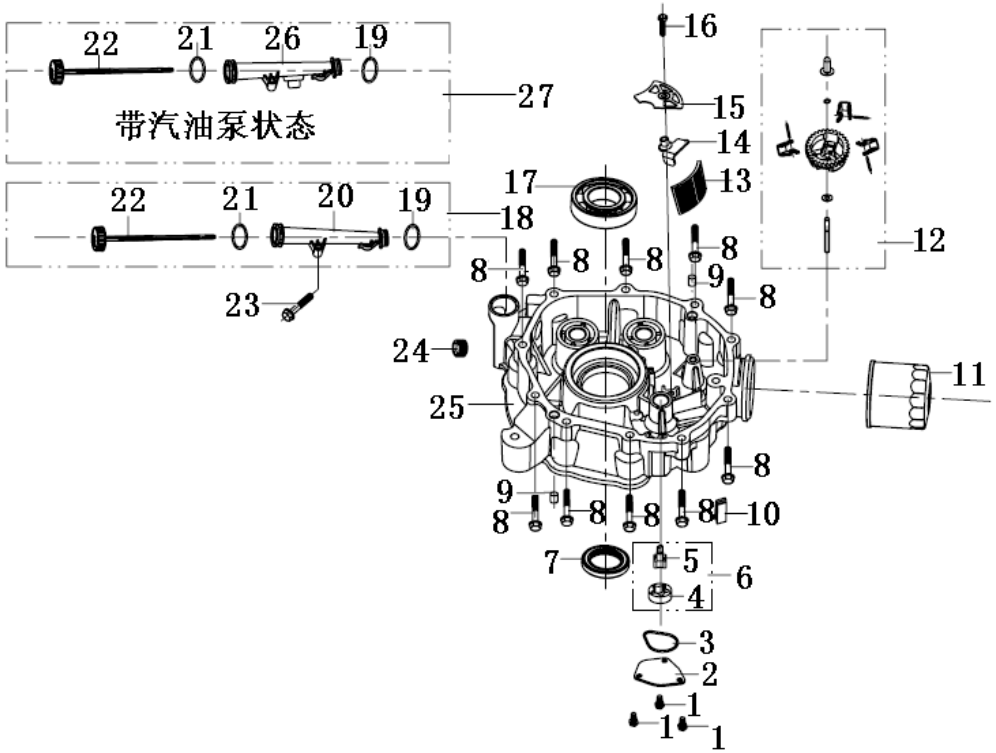

(Crankshaft Cover)

No.	Part No.	Description	(Reqd. QTY) 1P88F-1	1P90F-1	1P92F-1
1	380140013-0005	Bolt,Flange M6×16	3	3	3
2	150040019-T370	Oil Pump Cover	1	1	1
3	380840467-T370	Seal Ring,Oil Pump	1	1	1
4	150060027-T370	Rotor,Outer	1	1	1
5	150050028-T370	Rotor,Inner	1	1	1
6	150010050-T370	Pump,Oil	1	1	1
7	380650337-T110	Oil Seal, ϕ35×ϕ52×7	1	1	1
8	380140447-T370	Bolt,Flange M8×40	10	10	10
9	380600123-T370	Pin,Dowel ϕ10×12	2	2	2
10	150570003-T370	Rubber,oil deflector	1	1	1
11	150350023-T390	OIL FILTER ASSY	1	1	1
12	171750004-T110	Governor Assy	1	1	1
13	150290012-T370	Oil Strainer	1	1	1
14	120530002-T370	Oil Baffle Plate	1	1	1
15	150340008-T370	Cover,Oil Strainer	1	1	1

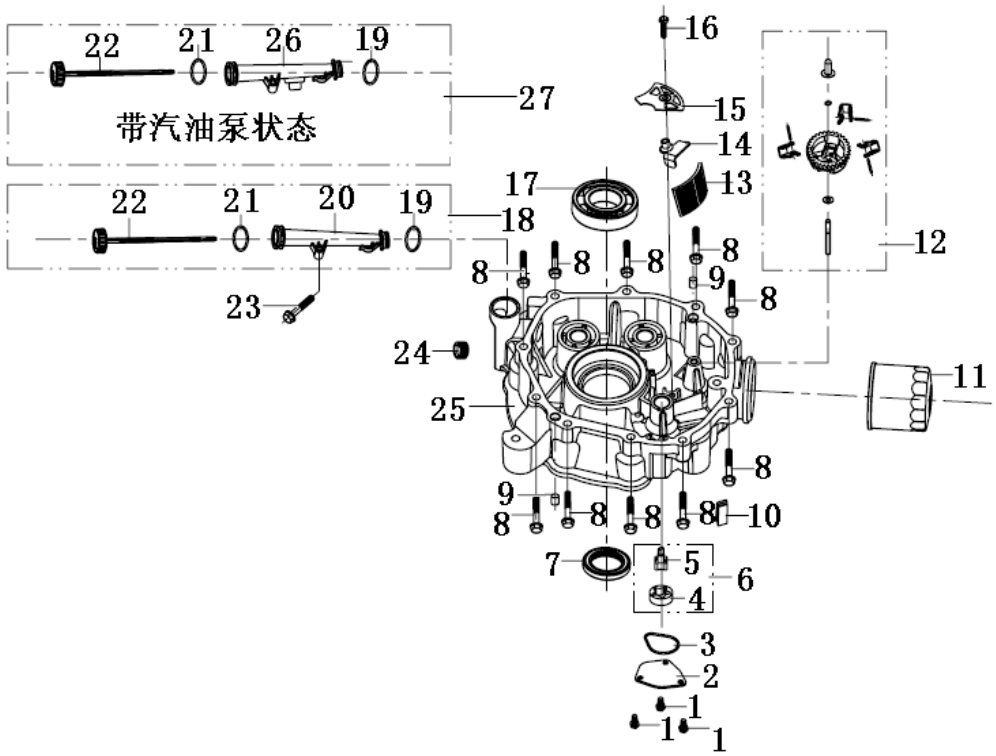

(Crankshaft Cover)

No.	Part No.	Description	(Reqd. QTY) 1P88F-1	1P90F-1	1P92F-1
16	380140103-0004	Bolt,Flange F6×25	1	1	1
17	380630141-0002	Eddp Groove Ball Bearing	1	1	1
18	110690047-T381	Cap Assy	1	1	1
19	380840762-T381	O-Ring	1	1	1
20	110710011-T381	Extension	1	1	1
21	380840763-T381	O-Ring	1	1	1
22	110700063-T381	Oil Filler Cap	1	1	1
23	380140100-0003	Bolt,Flange M6×35	1	1	1
24	110260026-T370	Drain Bolt 3/8-18 Nptf	1	1	1
25	110820059-T381	Cover,Breather Side	1	1	1
	110820060-T381	Cover,Breather Side	1	1	1
26	110710005-T381	Extension	1	1	1
27	110690048-T381	Cap Assy	1	1	1

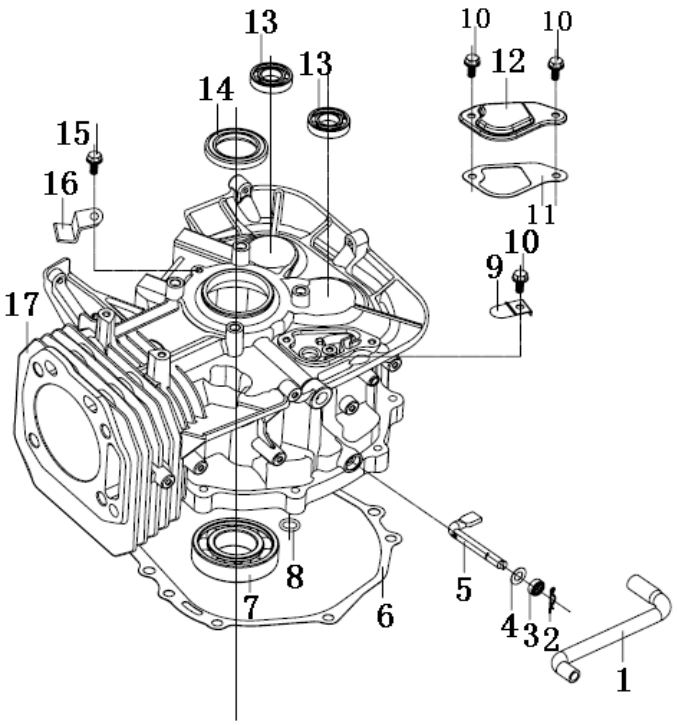

(Crankcase)

No.	Part No.	Description	(Reqd. QTY) 1P88F-1	1P90F-1	1P92F-1
1	380740462-T370	Tube,Breather	1	1	1
2	381350004-T040	Pin,Lock	1	1	1
3	380650339-T110	Oil Seal	1	1	1
4	380450559-T370	Washer	1	1	1
5	171630008-T370	Shaft,Governor Arm	1	1	1
6	110830037-T381	Packing,Case Cover	1	1	1
7	380630141-0002	Eddp Groove Ball Beaeing	1	1	1
8	380840443-T370	O-Ring 12×2.5	1	1	1
9	140250006-T370	Reed Valve	1	1	1
10	380140067-0003	Bolt,Flange M6×12	3	3	3
11	110850004-T370	Packing,Breather Chamber	1	1	1
12	110840005-T370	Cap,Breather Chamber	1	1	1
13	380630026-0001	Eddp Groove Ball Beaeing	2	2	2
14	380650337-T110	Oil Seal, ϕ35× ϕ52×7	1	1	1
15	380140209-0001	Bolt,Flange M6×14	1	1	1

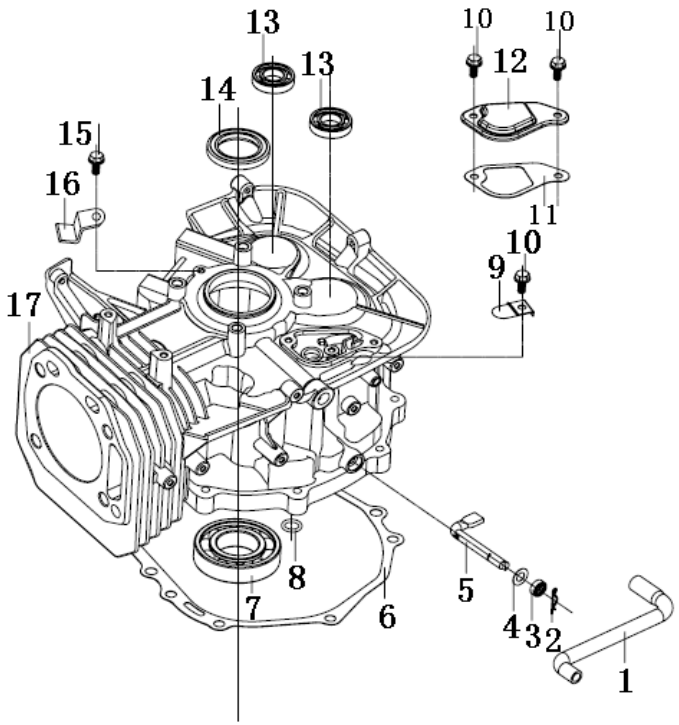

(Crankcase)

No.	Part No.	Description	(Reqd. QTY) 1P88F-1	1P90F-1	1P92F-1
16	110480024-T381	Valve,Breather Chamber	1	1	1
17	110810113-T361	Crank Case Comp	1	—	—
	110810152-T371	Crank Case Comp	—	1	—
	110810112-T381	Crank Case Comp	—	—	1

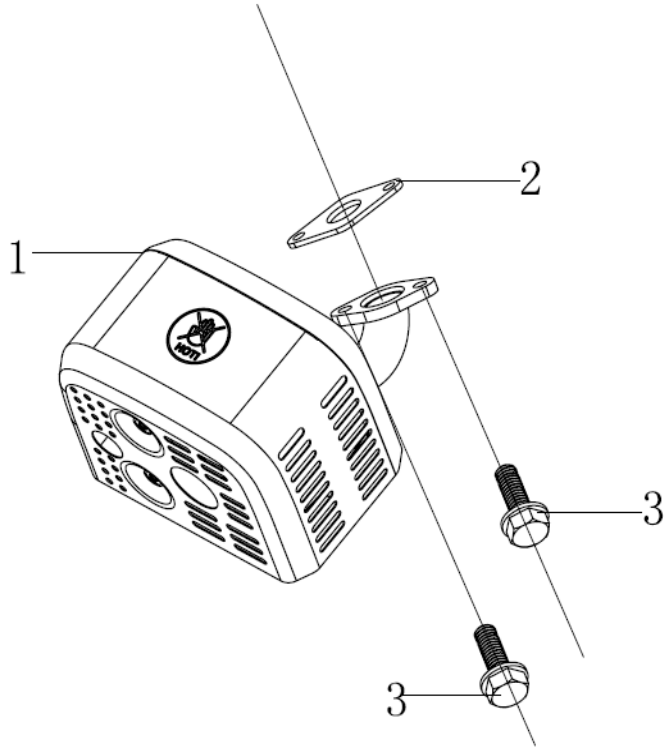

(Muffler)

No.	Part No.	Description	(Reqd. QTY)		
			1P88F-1	1P90F-1	1P92F-1
1	180571293-T381	Muffler	1	1	1
2	180650074-T370	Gasket,Ex.Pipe	1	1	1
3	380140489-T381	Bolt,Flange	2	2	2

Model	Spark Plug Brand	Plug model Number	Champion Equivalent
LC152F	Nandi	E5RTC	RL95YC
LC154F-1	Nandi	E5RTC	RL95YC
G200F	BOSCH	F7RTC	RN9YC
G200FA	BOSCH	F7RTC	RN9YC
G270F	BOSCH	F7RTC	RN9YC
LC1P65FA	BOSCH	F7TC	N9YC
LC1P70F	BOSCH	F7RTC	RN9YC
LC1P70FA	BOSCH	F7RTC	RN9YC
LC1P90F-1	CHAMPION	RC12YC	RC12YC
LC1P92F-1	CHAMPION	RC12YC	RC12YC
LC2P77F	CHAMPION	RN9YC	RN9YC
LC2P80F	CHAMPION	RN9YC	RN9YC

Plugs Used on Loncin Engines		Champion Equivalent
Model	Brand	
E5RTC	Nandi	RL95YC
F7RTC	BOSCH	RN9YC
F7TC	BOSCH	N9YC
RC12YC	CHAMPION	RC12YC
RN9YC	CHAMPION	RN9YC